Read This First

Manuals Provided with This Machine 1

Safety Information for This Machine 2

Other Information for This Machine 3

Appendix 4

For information not in this manual, refer to the HTML/PDF files on the supplied CD-ROM.

Read this manual carefully before you use this machine and keep it handy for future reference. For safe and correct use, be sure to read the Safety Information in this manual before using the machine.

TABLE OF CONTENTS

How to Read the Manuals.....2
Symbols Used in the Manuals.....2
Disclaimer.....2
Notes.....3
Machine Types.....3

1. Manuals Provided with This Machine

Manuals for This Machine.....5
Manuals List.....7
How to Use the Operating Instructions.....9
Formats of the Operating Instructions.....9
Start Installer.....9
Read HTML Manuals.....9
Read the HTML manuals on the control panel.....10

2. Safety Information for This Machine

Safety Symbols for This Machine.....11
Safety Information.....13
Safety During Operation.....13
Safety Precautions to Be Followed.....13
Safety Labels of This Machine.....20
Positions of WARNING and CAUTION labels.....20
Symbols for Earth, Insulation, and Power Switch.....28

3. Other Information for This Machine

Laws and Regulations.....29
Duplication and Printing Prohibited.....29
Laser Safety.....29
EMC Directive.....29
User Information on Electrical and Electronic Equipment (For Users in India).....29
NOTICE TO USERS (NEW ZEALAND).....30

4. Appendix

Trademarks.....31

How to Read the Manuals

Symbols Used in the Manuals

This manual uses the following symbols:

Important

Indicates points to pay attention to when using the machine, and explanations of likely causes of paper misfeeds, damage to originals, or loss of data. Be sure to read these explanations.

Note

Indicates supplementary explanations of the machine's functions, and instructions on resolving user errors.

Reference

This symbol is located at the end of sections. It indicates where you can find further relevant information.

[ ]

Indicates the names of keys on the machine's display or control panels.

Indicates instructions displayed on the control panel.

Indicates instructions in sheet form.

Region A (mainly Europe and Asia), (mainly Europe), or (mainly Asia)

Region B (mainly North America)

Differences in the functions of Region A and Region B models are indicated by two symbols. Read the information indicated by the symbol that corresponds to the region of the model you are using. For details about which symbol corresponds to the model you are using, see "Model-Specific Information", Getting Started.

Disclaimer

To the maximum extent permitted by applicable laws, in no event will the manufacturer be liable for any damages whatsoever arising out of failures of this machine, losses of the registered data, or the use or non-use of this product and operation manuals provided with it.

Make sure that you always copy or have backups of the data registered in this machine. Documents or data might be erased due to your operational errors or malfunctions of the machine.

In no event will the manufacturer be responsible for any documents created by you using this machine or any results from the data executed by you.

Notes

Contents of this manual are subject to change without prior notice.

The manufacturer shall not be responsible for any damage or expense that might result from the use of parts other than genuine parts from the manufacturer with your office products.

For good output quality, the manufacturer recommends that you use genuine toner from the manufacturer.

Some illustrations in this manual might be slightly different from the machine.

Machine Types

Check the type of your machine before reading the manuals.

- Type 1: MP 6503SP
- Type 2: MP 7503SP
- Type 3: MP 9003SP

Certain types might not be available in some countries. For details, please contact your local dealer.

Certain options might not be available in some countries. For details, please contact your local dealer.

Depending on which country you are in, certain units may be optional. For details, please contact your local dealer.

1. Manuals Provided with This Machine

This chapter explains manuals for this machine.

Manuals for This Machine

Read this manual carefully before you use this machine.

Refer to the manuals that are relevant to what you want to do with the machine.

Important

- **Media differ according to manual.**
- **Adobe® Reader® must be installed in order to view the manuals as PDF files.**
- **A Web browser must be installed in order to view the html manuals.**

User Guide

Regarding the basic usage of this machine, frequently used functions, troubleshooting when an error message appears, etc., summaries are provided below for each user manual.

Read This First

Before using the machine, be sure to read the section of this manual entitled Safety Information. It also describes each regulation and environmental conformance.

Start Guide

Describes how to read manuals on the control panel. It also describes how to log in to the machine.

Easy Search

You can search for a description by what you want to do. Also, this machine's distinctive functions are explained.

Getting Started

Describes preparations for using the machine, operating instructions, and character input methods.

Paper Specifications and Adding Paper

Describes how to load originals and sheets and about their specifications.

Convenient Functions

Describes how to register frequently used settings, customize the Home Screen, and display a Web page on the control panel. It also describes how to manage a job.

Maintenance and Specifications

Describes how to replace supplies and how to install and clean this machine. It also describes the specifications of the main unit and options.

Troubleshooting

Provides a guide for resolving common usage-related problems.

Copy/ Document Server

Explains Copier and Document Server functions and operations. Also refer to this manual for explanations on how to specify the settings for originals.

Fax

Explains Facsimile functions and operations.

Print

Describes how to print using the printer driver. It also describes the functions available for printing.

Scan

Describes how to scan paper data using this machine and how to send the scanned data to a computer and store the data.

Connecting the Machine/ System Settings

Explains how to connect the machine to a network, and configure and operate the machine in a network environment. Also explains how to change User Tools settings and how to register information in the Address Book.

PostScript 3

Explains how to set up and use PostScript® 3™.

Extended Feature Settings

Describes how to configure the extended features using the control panel or Web Image Monitor.

Security Guide

This manual is for administrators of the machine. It explains security functions that you can use to prevent unauthorized use of the machine, data tampering, or information leakage. For enhanced security, we recommend that you first make the following settings:

- Install the Device Certificate.
- Enable SSL (Secure Sockets Layer) Encryption.
- Change the user name and password of the administrator.

For details, see "Before Using This Machine", Security Guide.

Be sure to read this manual when setting the enhanced security functions, or user and administrator authentication.

Driver Installation Guide

Describes how to install and configure each driver. This manual is included in the drivers CD.

Other Manuals

- Quick Reference Copy Guide
- Quick Reference Fax Guide
- Quick Reference Scanner Guide
- Appendix

- DHCP Option 204

Note

- You can download information about the machine's certification, which is based on an IT security certification system (hereafter CC Certification), from https://support-download.com/services/device/ccmanual/mp_6503_7503_9003/en/download_admin.html and https://support-download.com/services/device/ccmanual/mp_6503_7503_9003/en/download_user.html. This information is about how to set up the machine. If you have purchased a CC Certified machine, be sure to read it before operating the machine so you can make the correct settings before using it.
- Manuals provided are specific to machine types.
- Driver Installation Guide and HTML manuals are available in English, German, French, Italian, Spanish, Dutch, and Russian.

Manuals List

Manual Name	Printed Manuals Provided	HTML Manuals Provided	Manuals displayed on the control panel	PDF Manuals Provided
User Guide	No	No	No	Yes
Read This First	Yes	No	No	Yes
Start Guide	Yes	No	No	Yes
Easy Search	No	Yes *1	Yes *1	No
Getting Started	No	Yes *1	Yes *1	No
Paper Specifications and Adding Paper	No	Yes *1	Yes *1	No
Convenient Functions	No	Yes *1	Yes *1	No
Maintenance and Specifications	No	Yes *1	Yes *1	No
Troubleshooting	No	Yes *1	Yes *1	No
Copy/ Document Server	No	Yes *1	Yes *1	No

Manual Name	Printed Manuals Provided	HTML Manuals Provided	Manuals displayed on the control panel	PDF Manuals Provided
Fax	No	Yes *1	Yes *1	No
Print	No	Yes *1	Yes *1	No
Scan	No	Yes *1	Yes *1	No
Connecting the Machine/ System Settings	No	Yes *1	Yes *1	No
PostScript 3	No	Yes *2	Yes *2	No
Extended Feature Settings	No	Yes *1	Yes *1	No
Security Guide	No	Yes	Yes	No
Driver Installation Guide	No	No	No	Yes *1
Quick Reference Copy Guide	No	No	No	Yes
Quick Reference Fax Guide	No	No	No	Yes
Quick Reference Scanner Guide	No	No	No	Yes

*1 These manuals are available in English, German, French, Italian, Spanish, Dutch, and Russian.

*2 This manual is available in English, German, French, Italian, Spanish, and Dutch.

How to Use the Operating Instructions

This chapter describes the operating instructions of this machine.

Formats of the Operating Instructions

The operating instructions of this machine are provided in the following formats:

- Printed manuals
- HTML manuals
- Manuals displayed on the control panel
- PDF manuals

For details about the contents of each manual, see page 5 "Manuals for This Machine". The various manuals are available in different formats. For details about availability, see page 7 "Manuals List".

Start Installer

The installer starts automatically when you insert the provided CD-ROM into the CD-ROM drive of a client computer. Follow the on-screen instructions.

Auto Run might not work automatically with certain OS settings. If this is the case, double-click "setup.exe".

Read HTML Manuals

The following browsers are recommended to read the HTML manuals.

- Internet Explorer 8/9/10/11
- Firefox 29
- Safari 5.1.7
- Chrome 35

Note

- If JavaScript is disabled or unavailable in your browser, you will not be able to search or use certain buttons in the HTML documentation.
- The required display resolution is 1,024 × 768 pixels or greater.
- In the help on the top right of the top page, you can check how to use the HTML manuals. The help topics explain the icons and buttons that are displayed in the HTML manuals.

Search for what you want to do or can do

Using Easy Search, you can search for what want to do or can do with this machine.

1. **Click Easy Search on the top right of the top page.**
2. **Click a title to display the item you want to read.**

Search by entering a keyword

You can search through the HTML manuals.

This section explains how to search for "duplex".

1. **Enter "duplex" in the search box on the top left of the top page.**
2. **Click** **.**

   A list of titles or descriptions that include "duplex" appears.

   A search result appears in the search result window. In addition you can use the drop-down menu to select a manual.
3. **Click a title to display the item you want to read.**

Note

- Use keywords to search for items you want to query. Depending on the keyword you enter, related keywords might also appear.
- Items including the used keyword is appear in the search result window.
- If you put a space between keywords, pages that contain both keywords are displayed. For example, if you enter "duplex" and a space and "copy", items including both words appear in the search result window.)

Read the HTML manuals on the control panel

You can also read the HTML manuals on the control panel. For details about how to read the HTML manuals on the control panel, see Start Guide.

2. Safety Information for This Machine

This chapter describes the safety precautions.

Safety Symbols for This Machine

The meanings of the safety symbols for this machine are as follows:

	Prohibition
	Caution
	Warning; Laser beam
	Do not touch
	Do not throw into the fire
	Do not use the cleaner
	Keep out of reach of children
	Keep out of reach of children
	Caution, hot surface

Caution, risk of having hands or arms caught

Safety Information

Safety During Operation

In this manual, the following important symbols are used:

⚠WARNING
Indicates a potentially hazardous situation which, if instructions are not followed, could result in death or serious injury.

⚠CAUTION
Indicates a potentially hazardous situation which, if instructions are not followed, may result in minor or moderate injury or damage to property.

Safety Precautions to Be Followed

This section explains safety precautions that should always be followed when using this machine.

Environments where the machine can be used

This section explains safety precautions about environments where the machine can be used.

⚠WARNING

- Do not use flammable sprays or solvents in the vicinity of this machine. Also, avoid placing these items in the vicinity of this machine. Doing so could result in fire or electric shock.

- Do not place vases, plant pots, cups, toiletries, medicines, small metal objects, or containers holding water or any other liquids, on or close to this machine. Fire or electric shock could result from spillage or if such objects or substances fall inside this machine.

⚠CAUTION

- Keep the machine away from humidity and dust. Otherwise a fire or an electric shock might occur.

- Do not place the machine on an unstable or tilted surface. If it topples over, an injury might occur.

- Do not place heavy objects on the machine. Doing so can cause the machine to topple over, possibly resulting in injury.

⚠CAUTION

- Make sure the room where you are using the machine is well ventilated and spacious. Good ventilation is especially important when the machine is used heavily.

- Keep the machine away from salt-bearing air and corrosive gases. Also, do not install the machine in places where chemical reactions are likely (laboratories, etc.), as doing so will cause the machine to malfunction.

- Do not obstruct the machine's vents. Doing so risks fire caused by overheated internal components.

Handling power cords and power cord plugs

This section explains safety precautions about handling power cords and power cord plugs.

⚠WARNING

- Do not use any power sources other than those that match the specifications shown. Doing so could result in fire or electric shock.

- Do not use any frequencies other than those that match the specifications shown. Doing so could result in fire or electric shock.

- Do not use multi-socket adaptors. Doing so could result in fire or electric shock.

- Do not use extension cords. Doing so could result in fire or electric shock.

- Do not use power cords that are damaged, broken, or modified. Also, do not use power cords that have been trapped under heavy objects, pulled hard, or bent severely. Doing so could result in fire or electric shock.

- Touching the prongs of the power cable's plug with anything metallic constitutes a fire and electric shock hazard.

- The supplied power cord is for use with this machine only. Do not use it with other appliances. Doing so could result in fire or electric shock.

- It is dangerous to handle the power cord plug with wet hands. Doing so could result in electric shock.

⚠WARNING

- If the power cord is damaged and its inner wires are exposed or broken, contact your service representative for a replacement. Use of damaged power cords could result in fire or electric shock.

- Be sure to disconnect the plug from the wall outlet at least once a year and check for the following:
  - There are burn marks on the plug.
  - The prongs on the plug are deformed.
- If any of the above conditions exist, do not use the plug and consult your dealer or service representative. Use of the plug could result in fire or electric shock.

- Be sure to disconnect the power cord from the wall outlet at least once a year and check for the following:
  - The power cord's inner wires are exposed, broken, etc.
  - The power cord's coating has a crack or dent.
  - When bending the power cord, the power turns off and on.
  - Part of the power cord becomes hot.
  - The power cord is damaged.
- If any of the above conditions exist, do not use the power cord and consult your dealer or service representative. Use of the power cord could result in fire or electric shock.

⚠CAUTION

- Be sure to push the plug of the power cord fully into the wall outlet. Partially inserted plugs create an unstable connection that can result in unsafe buildup of heat.

- If this machine is not going to be used for several days or longer at a time, disconnect its power cord from the wall outlet.

- When disconnecting the power cord from the wall outlet, always pull the plug, not the cord. Pulling the cord can damage the power cord. Use of damaged power cords could result in fire or electric shock.

- Be sure to disconnect the plug from the wall outlet and clean the prongs and the area around the prongs at least once a year. Allowing dust to build up on the plug constitutes a fire hazard.

- When performing maintenance on the machine, always disconnect the power cord from the wall outlet.

- Power Source

  220–240 V, 10 A, 50/60 Hz

Please be sure to connect the power cord to a power source as above.

Handling the main machine

This section explains safety precautions about handling the main machine.

⚠WARNING

- Be sure to locate the machine as close as possible to a wall outlet. This will allow easy disconnection of the power cord in the event of an emergency.

- If the machine emits smoke or odours, or if it behaves unusually, you must turn off its power immediately. After turning off the power, be sure to disconnect the power cord plug from the wall outlet. Then contact your service representative and report the problem. Do not use the machine. Doing so could result in fire or electric shock.

- If metal objects, or water or other fluids fall inside this machine, you must turn off its power immediately. After turning off the power, be sure to disconnect the power cord plug from the wall outlet. Then contact your service representative and report the problem. Do not use the machine. Doing so could result in fire or electric shock.

- Do not touch this machine if a lightning strike occurs in the immediate vicinity. Doing so could result in electric shock.

- The following explains the warning messages on the plastic bag used in this product's packaging.
  - Keep the polythene materials (bags, etc.) supplied with this machine away from babies and small children at all times. Suffocation can result if polythene materials are brought into contact with the mouth or nose.

⚠CAUTION

- Unplug the power cord from the wall outlet before you move the machine. While moving the machine, take care that the power cord is not damaged under the machine. Failing to take these precautions could result in fire or electric shock.

- After you move the machine, use the caster fixture to fix it in place. Otherwise the machine might move or come down to cause an injury.

⚠CAUTION

- Contact your service representative if you need to lift the machine (such as when relocating it to another floor). Do not attempt to lift the machine without the assistance of your service representative. The machine will be damaged if it topples or is dropped, resulting in malfunction and risk of injury to users.
- Service engineers use a specially designed cart to move the machine from one floor to another. The handles on the machine will be used solely by service engineers when they move the machine from one place to another on the same floor. Do not touch the handles.

- Do not look into the lamp. It can damage your eyes.

- Do not hold the control panel while moving the machine. Doing so may damage the control panel, cause a malfunction, or result in injury.

- Keep your hands away from the hinges and exposure glass when lowering the ADF. Not doing so result in an injury if your hands or fingers are pinched.

Handling the machine's interior

This section explains safety precautions about handling the machine's interior.

⚠WARNING

- Do not remove any covers or screws other than those explicitly mentioned in this manual. Inside this machine are high voltage components that are an electric shock hazard and laser components that could cause blindness. Contact your sales or service representative if any of the machine's internal components require maintenance, adjustment, or repair.
- Do not attempt to disassemble or modify this machine. Doing so risks burns and electric shock. Note again that exposure to the laser components inside this machine risks blindness.

⚠CAUTION

- Some of this machine's internal components get very hot. For this reason, take care when removing misfed paper. Not doing so could result in burns.

- Some of the internal components of this machine might be fragile. When you remove jammed paper, do not touch the sensors, connectors, LEDs, or other fragile parts that are shown in the Troubleshooting manual. Doing so may cause malfunctions.

- The inside of the machine could be very hot. Do not touch the parts with a label indicating the "hot surface". Otherwise, an injury might occur.

⚠CAUTION

- When removing jammed paper, make sure not to trap or injure your fingers.

- When loading paper, take care not to trap or injure your fingers.

- While safety measures have been installed to prevent accidents, you must not touch the machine's rollers while it is operating. Doing so could cause injury.

- Keep your hands clear of the booklet finisher tray when removing misfed paper, pulling out or pushing in the finisher's staple unit. You can trap and injure your fingers if you do not.

- During operation, rollers for transporting the paper and originals revolve. A safety device has been installed so that the machine can be operated safely. But take care not to touch the machine during operation. Otherwise, an injury might occur.

- If the machine's interior is not cleaned regularly, dust will accumulate. Fire and breakdown can result from heavy accumulation of dust inside this machine. Contact your sales or service representative for details about and charges for cleaning the machine's interior.

Handling the machine's supplies

This section explains safety precautions about handling the machine's supplies.

⚠WARNING

- Do not incinerate toner (new or used) or toner containers. Doing so risks burns. Toner will ignite on contact with naked flame.

- Do not store toner (new or used) or toner containers anywhere near naked flames. Doing so risks fire and burns. Toner will ignite on contact with naked flame.

- Do not use a vacuum cleaner to remove spilled toner (including used toner). Absorbed toner may cause a fire or explosion due to electrical contact flickering inside the vacuum cleaner. However, it is possible to use a vacuum cleaner that is explosion-proof and dust ignition-proof. If toner is spilled on the floor, remove the spilled toner slowly using a wet cloth, so that the toner is not scattered.

- The following explains the warning messages on the plastic bag used in this product's packaging.
    - Keep the polythene materials (bags, etc.) supplied with this machine away from babies and small children at all times. Suffocation can result if polythene materials are brought into contact with the mouth or nose.

⚠CAUTION

- Do not crush or squeeze toner containers. Doing so can cause toner spillage, possibly resulting in dirtying of skin, clothing, and floor, and accidental ingestion.

- Store toner (new or used), toner containers, and components that have been in contact with toner out of reach of children.

- If toner or used toner is inhaled, gargle with plenty of water and move into a fresh air environment. Consult a doctor if necessary.

- If toner or used toner gets into your eyes, flush immediately with large amounts of water. Consult a doctor if necessary.

- If toner or used toner is swallowed, dilute by drinking a large amount of water. Consult a doctor if necessary.

- When removing jammed paper or replacing toner, avoid getting toner (new or used) on your clothing. If toner comes into contact with your clothing, wash the stained area with cold water. Hot water will set the toner into the fabric and make removing the stain impossible.

- When removing jammed paper or replacing toner, avoid getting toner (new or used) on your skin. If toner comes into contact with your skin, wash the affected area thoroughly with soap and water.

- When replacing a toner or waste toner container or consumables with toner, make sure that the toner does not splatter. Put the waste consumables in a bag after they are removed. For consumables with a lid, make sure that the lid is shut.

- Do not attempt to print on stapled sheets, aluminum foil, carbon paper, or any kind of conductive paper. Doing so risks fire.

- Keep SD cards or USB flash memory devices out of reach of children. If a child accidentally swallows an SD card or USB flash memory device, consult a doctor immediately.

Safety Labels of This Machine

This section explains the machine's safety information labels.

Positions of WARNING and CAUTION labels

This machine has labels for ⚠WARNING and ⚠CAUTION at the positions shown below. For safety, please follow the instructions and handle the machine as indicated.

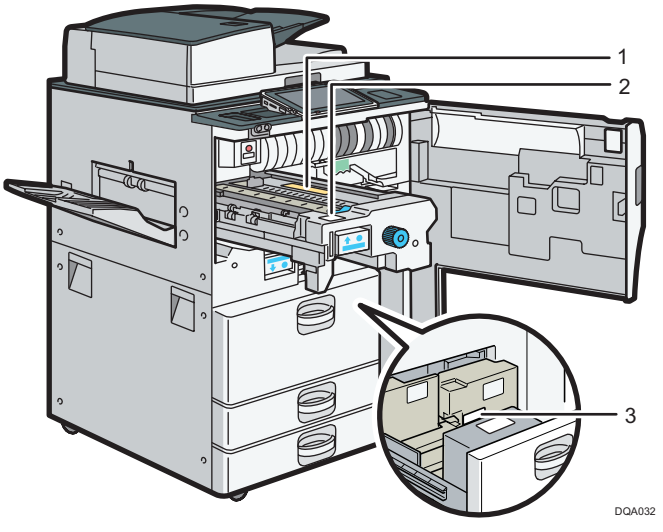

1

CJZ111

The inside of the machine could be very hot. Do not touch the parts which a label is put on. Otherwise, an injury might occur.

2

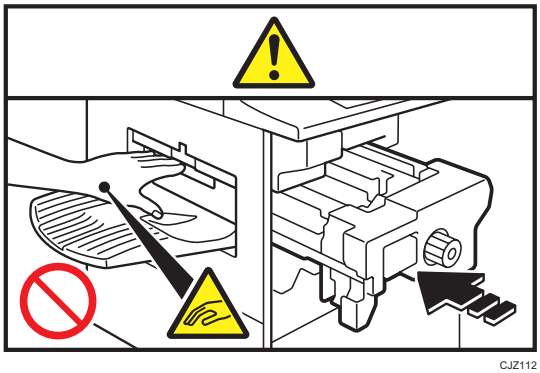

CJZ112

Keep your hands clear of the finisher tray when removing paper jam. You might trap your fingers if you do not.

3

CJZ113

Do not touch the parts a label indicates. The inside of the machine could be very hot. Caution should be taken when removing misfed paper.

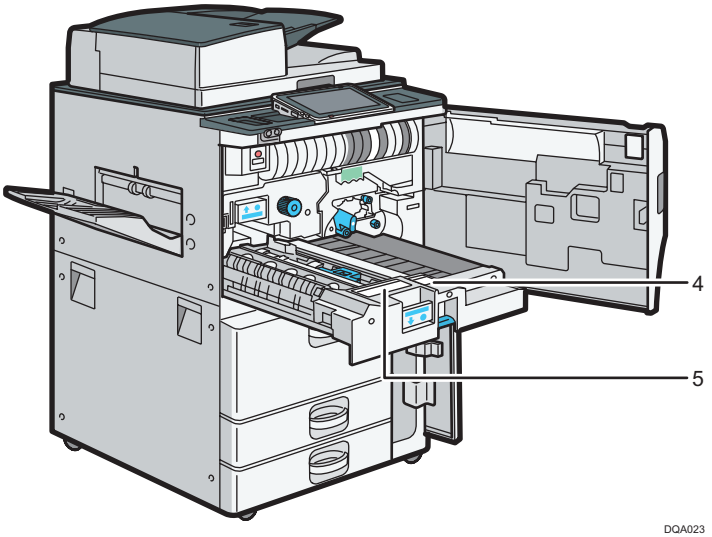

DQA023

4

DQA331

Do not press the internal unit that has been pulled out. Pressing the internal unit may cause it to fall down.

5

CJZ114

Do not touch the parts a label indicates. The inside of the machine could be very hot. Caution should be taken when removing misfed paper.

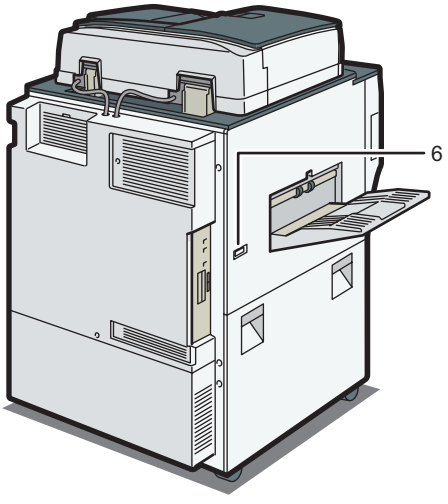

DQA024

6

CJZ115

Keep your hands clear of the finisher tray when removing paper jam. You might trap your fingers if you do not.

Finisher SR4120 or Booklet Finisher SR4130

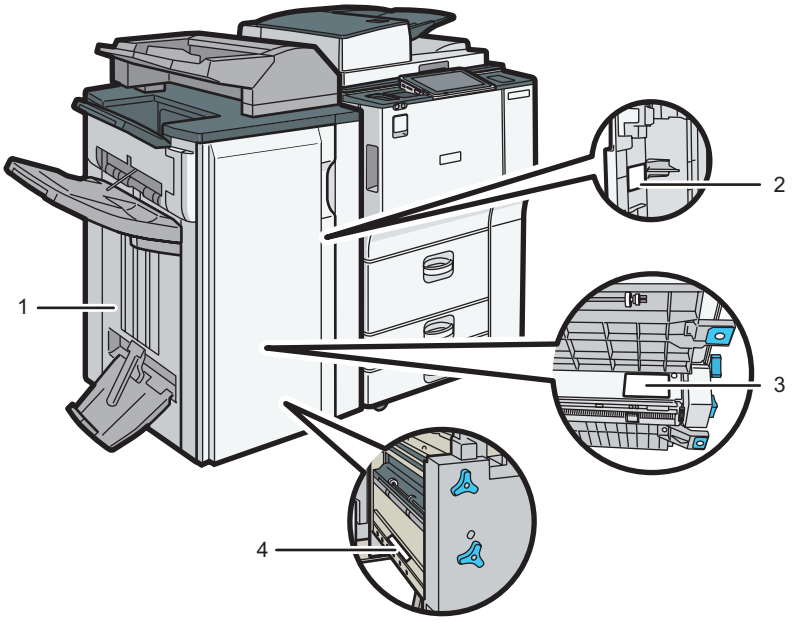

DQA025

1

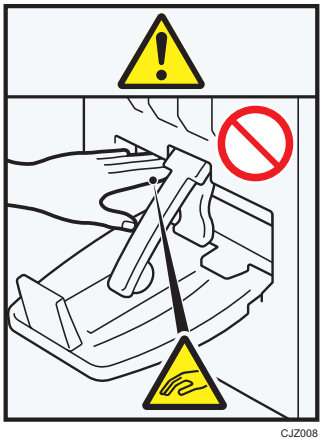

CJZ008

Keep your hands clear of the booklet finisher tray when pulling out or pushing in the finisher's staple unit, or removing paper jam. You might trap your fingers if you do not. Take care not to touch the booklet finisher tray during operation. Otherwise, an injury might occur.

2

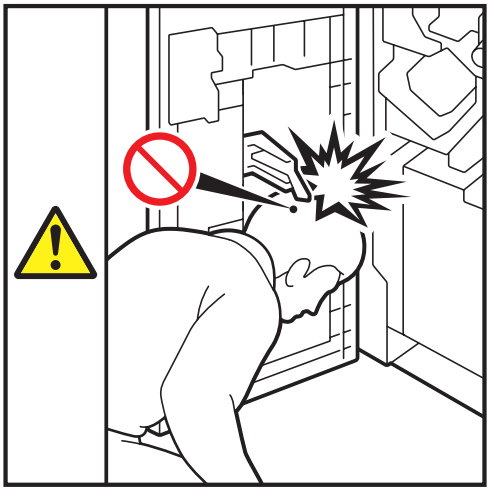

DQA335

Be careful of the protruding parts of the front cover when replacing the cartridge in the saddle stitch unit or clearing a paper jam from the saddle stitch unit.

3

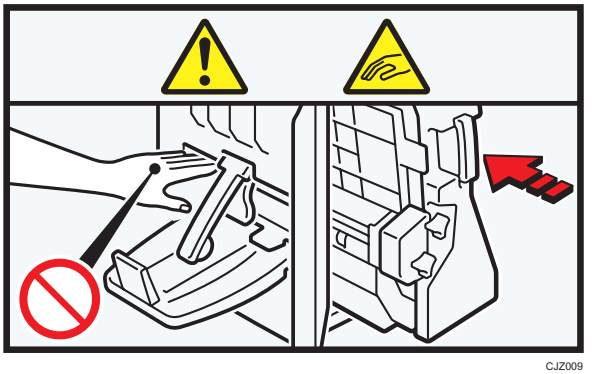

CJZ009

Keep your hands clear of the booklet finisher tray when pulling out or pushing in the finisher's staple unit, or removing paper jam. You might trap your fingers if you do not.

4

DQA336

Be careful of the protruding parts of the front cover when replacing the cartridge in the saddle stitch unit or clearing a paper jam from the saddle stitch unit.

Multi-Folding Unit

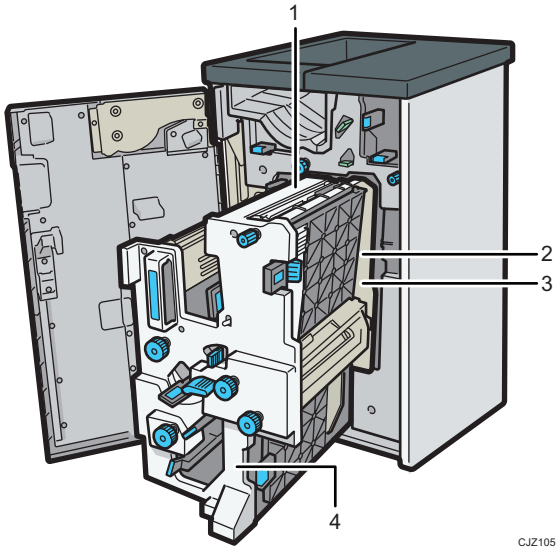

CJZ105

1

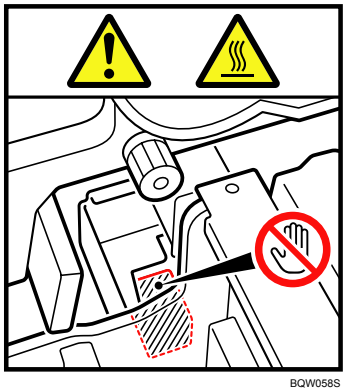

BQW058S

Do not touch the parts a label indicates. The inside of the Multi-Folding Unit could be very hot. Caution should be taken when removing misfed paper.

2

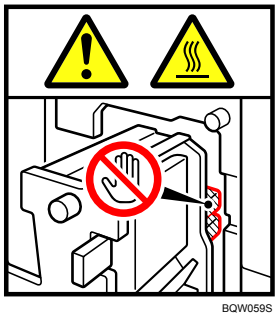

BQW059S

Do not touch the parts a label indicates. The inside of the Multi-Folding Unit could be very hot. Caution should be taken when removing misfed paper.

3

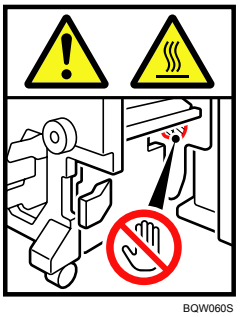

BQW060S

Do not touch the parts a label indicates. The inside of the Multi-Folding Unit could be very hot. Caution should be taken when removing misfed paper.

4

BQW064S

Do not touch the parts a label indicates. The inside of the Multi-Folding Unit could be very hot. Caution should be taken when removing misfed paper.

Symbols for Earth, Insulation, and Power Switch

Symbols for earth, insulation, and power switch that are used for this machine are as follows:

- ⏚: Earth
- I : POWER ON
- ⏻ : STANDBY

3. Other Information for This Machine

This chapter describes laws and regulations related to this machine.

Laws and Regulations

Duplication and Printing Prohibited

Do not copy or print any item for which reproduction is prohibited by law.

Copying or printing the following items is generally prohibited by local law:

bank notes, revenue stamps, bonds, stock certificates, bank drafts, checks, passports, driver's licenses.

The preceding list is meant as a guide only and is not inclusive. We assume no responsibility for its completeness or accuracy. If you have any questions concerning the legality of copying or printing certain items, consult with your legal advisor.

Laser Safety

This machine complies with the requirements of IEC60825-1:2014 for class 1 laser product. This machine contains multiple AlGaInP laser diodes, 15-milliwatt, 653–665 nanometer wavelength for each emitter. The beam divergence angle is 16 degrees (minimum) and 22 degrees (maximum) in the vertical direction, and 7 degrees (minimum) and 11 degrees (maximum) in the horizontal direction, and laser beams are generated in Continuous Wave (CW) mode.

Caution

Use of controls or adjustments or performance of procedures other than those specified in this manual might result in hazardous radiation exposure.

EMC Directive

Installing the Ferrite Core

An Ethernet interface cable and a telephone line cable with a ferrite core must be used for RF interference suppression.

User Information on Electrical and Electronic Equipment (For Users in India)

This product complies with the "India E-waste Rule 2011" and prohibits use of lead, mercury, hexavalent chromium, polybrominated biphenyls or polybrominated diphenyl ethers in concentrations

exceeding 0.1 weight % and 0.01 weight % for cadmium, except for the exemptions set in Schedule 2 of the Rule.

NOTICE TO USERS (NEW ZEALAND)

- The grant of a Telepermit for any item of terminal equipment indicates only that Telecom has accepted that the item complies with minimum conditions for connection to its network. It indicates no endorsement of the product by Telecom, nor does it provide any sort of warranty. Above all, it provides no assurance that any item will work correctly in all respects with another item of Telepermitted equipment of a different make or model, nor does it imply that any product is compatible with all of Telecom's network services.
- This equipment is not capable, under all operating conditions, of correct operation at the higher speeds for which it is designed. Telecom will accept no responsibility should difficulties arise in such circumstances.
- Devices connected to the telephone port may lose their memory if this fax machine is on line for extended periods. To prevent this, such devices should have the facility for battery or similar backup of memory.
- This device may be subject to ringing or bell tinkle when certain other devices are connected to the same line. If this occurs, the problem should not be referred to the Telecom Faults Service.
- This equipment should not be used under any circumstances that may constitute a nuisance to other Telecom customers.
- Telepermitted equipment only may be connected to the auxiliary telephone port. The auxiliary telephone port is not specifically designed for 3-wire connected equipment that may not respond to incoming ringing when attached to this port.

4. Appendix

This appendix describes trademarks for the machine.

Trademarks

Adobe, PostScript, PostScript 3, and Reader are either registered trademarks or trademarks of Adobe Systems Incorporated in the United States and/or other countries.

Firefox is a registered trademark of the Mozilla Foundation.

Google and Chrome are trademarks of Google Inc.

Microsoft, Windows, and Internet Explorer are either registered trademarks or trademarks of Microsoft Corporation in the United States and/or other countries.

Safari is a trademark of Apple Inc., registered in the United States and other countries.

The SD is a trademark of SD-3C, LLC.

The proper names of Internet Explorer 8, 9, 10 and 11 are as follows:

- Windows® Internet Explorer® 8
- Windows® Internet Explorer® 9
- Internet Explorer® 10
- Internet Explorer® 11

Other product names used herein are for identification purposes only and might be trademarks of their respective companies. We disclaim any and all rights to those marks.

MEMO

© 2016